HSF

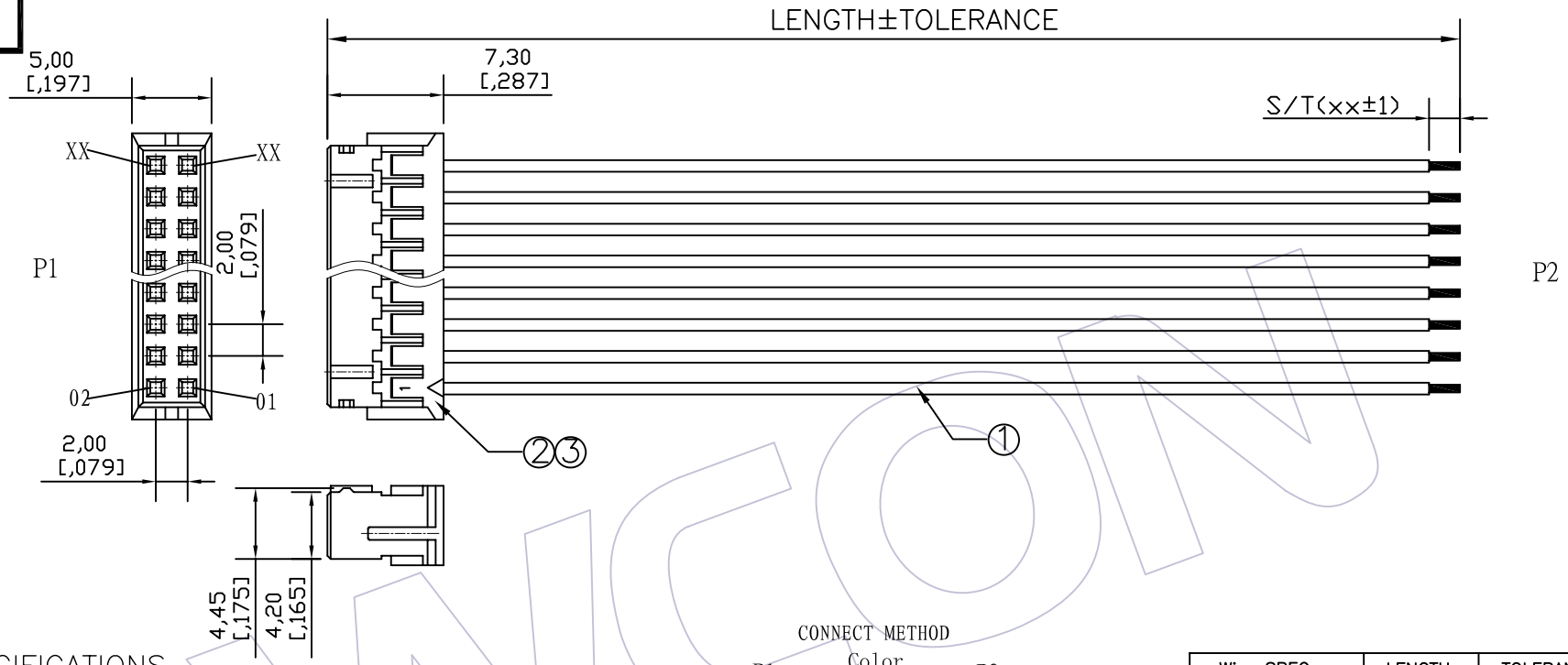

SPECIFICATIONS

Insulation Resistance: 5MΩ Min

Contact Resistance: 3.0Ω Max

Withstand Voltage: DC 300V, 10S

The Cable Assembly Must 100% Test

CONNECT METHOD

P1	Color	P2
01	XXX	OPEN
02	XXX	OPEN
03	XXX	OPEN
⋮		
XX	XXX	OPEN

Wire SPEC	LENGTH	TOLERANCE
ULxxxx 22~28AWG	1~499	±5
	500~999	±10
	1000~1500	±15
	1501~3000	±20
	3001~5000	±30
	5001~	± Lx1%

Ordering Information

C9120 - xx 01 xxx 101

- xx: No.of Pins: 02~15P
- 01: Shape Style: 01=one end Process, another one end plate tin
- xxx: Length of Line

NO.	PART NO.	NAME	Specification	Q'TY	UNIT
③	WF2002-TPSN01	Terminal	PH2.00mm Phosphor Bronze Tin Terminal	xx	PCS
②	WF2002-HxxW01	Housing	PH2.00mm xxP White Housing	1	PCS
①	Wxxxx-1xxx00001	WIRE	UL: xxxx, AWG: 22~28, Color: xx, Wire	xxxx	MM

REV 版次	DATE 日期	MODIFICATION DESCRIPTION 变更说明	CHANGE 变更	APPROVE 核准
A0	09/09/24	NEW	———	———

工程图 ENGINEERING	绘图 DRAW	BEN	09/09/24
X.X ±0.30	设计 DESIGN		
X.XX ±0.20			
X.XXX ±0.10	审核 CHECK		
Angle ± 2°			
DIM TOL	核准 APPROVE		

SCALE	FREE
UNIT	mm
SIZE	A4
SHEET	1/1
PROJ.	

WCON 维峰五金电子有限公司 WAFE HARDWARE ELECTRONICS CO.LTD

料号 PART NO.	C9120-xx01xxx101
品名 TITLE:	PH2.00 **P Housing TO OPEN
客户料号 Customer NO.	