NOTES:
1.Material:
Housing: LCP,G.F,UL94V-0,BK
Contact/strip: Copper Alloy
2.Contact Plating:
xxu"Gold on contact area(See Ordering Information)
100u"Matte tin on solder area,
50u" Nickel underplating overall.
3.Ground strip: 100u"Matte tin over 50u" Nickel.
4.Rated Current: 12.0A Max
5.Contact Resistance: 10mΩ max
6.Withstand Voltage: 1500V AC
7.Insulation Resistance: 1000MΩ min
8.Operation Temperature: -55℃ to +105℃
9.Soldering: Solder temperature: 260±5℃
Solder time: 5±1S

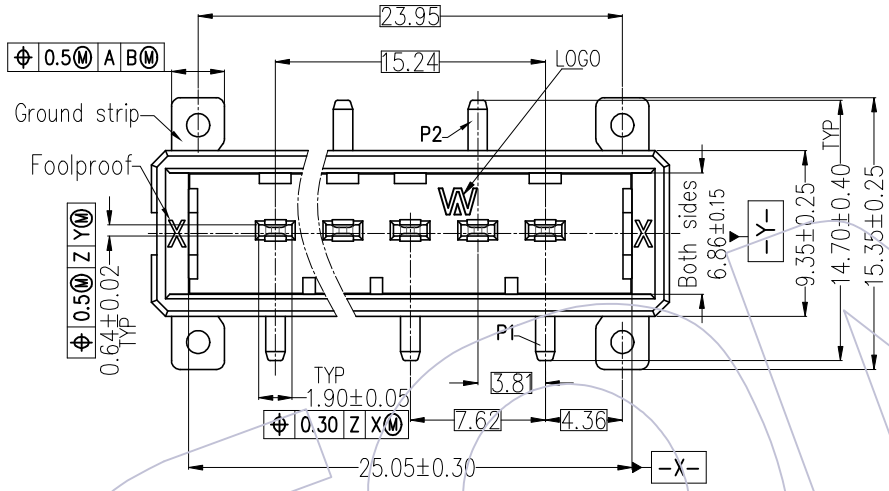

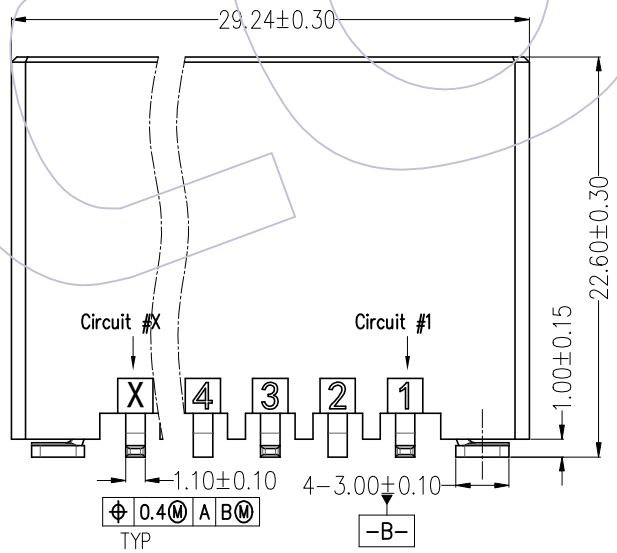

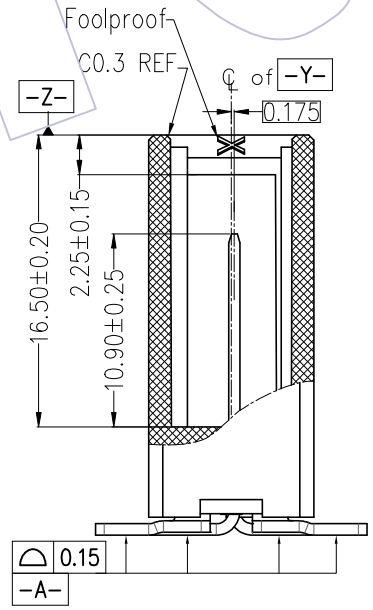

Ordering Information

WD3810-1 WM 05 XX B T XX W

- 1=Single Row
- WM=180°SMT
- No.of pins per row: 05=5P
- Contact Plated: SM=Matte Tin, W1=3u"Gold/Matte Tin, W4=15u"Gold/Matte Tin, W5=30u"Gold/Matte Tin
- Housing Color: B=Black
- T=Tube
- Foolproof: 01=X Code, 02=Y Code
- W=W/T W Logo, Blank=W/O W Logo

REV	DATE	MODIFICATION DESCRIPTION	CHANGE
A0	2021/06/21	NEW	XSR

OPERATION	
X.X	±0.40
X.XX	±0.25
X.XXX	±0.15
Angle	± 3°
DIM	TOL

DRAW	XSR	DATE	2021/06/21
CHECK		DATE	
APPROVE		DATE	

SCALE	FIT
UNIT	mm
SIZE	A4
SHEET	1/2
PROJ.	

PART NO. WD3810-1WM05XXBTXX(W)

TITLE: 3.81mm Dyn. (T Type)Single Row 180°SMT with Ground strip

Customer NO.

WCON
Http: www.wcon.com
WCON-Dongguan
Tel: +86 769 85358920
Fax: +86 769 85358915
E-mail: sales@wcon.com
WCON-Kunshan
Tel: +86 512 57468408
Fax: +86 512 57468468
E-mail: salesks@wcon.com