HSF

NOTES:
Current Rating: 1AMP
Contact Resistance: 35mΩ max
Withstand Voltage: 500V AC
Insulation Resistance: 1000MΩ min
Operation Temperature: −55℃ to +105℃

Contact Material: Phosphor Bronze
Contact plating: Au or Sn over Ni
Shell Material: SPCC, t=0.50mm
Housing Material: PBT+30%GF(UL94V-0)
Cover Material: LCP+30%GF(UL94V-0)

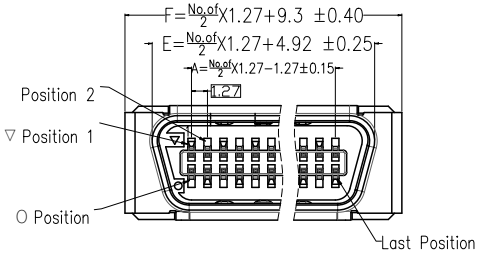

PART NO.	PIN	A	E	F	G
6320M-014SSXXMNA01	14P	7.62	13.81	18.19	17.14
6320M-020SSXXMNA01	20P	11.43	17.62	22.00	20.95
6320M-026SSXXMNA01	26P	15.24	21.43	25.81	24.76
6320M-036SSXXMNA01	36P	21.59	27.78	32.16	31.11
6320M-040SSXXMNA01	40P	24.13	30.32	34.70	33.65
6320M-050SSXXMNA01	50P	30.48	36.67	41.05	40.00
6320M-068SSXXMNA01	68P	41.91	48.10	52.48	51.43
6320M-080SSXXMNA01	80P	49.53	55.72	60.10	59.05
6320M-100SSXXMNA01	100P	62.23	68.42	72.80	71.75

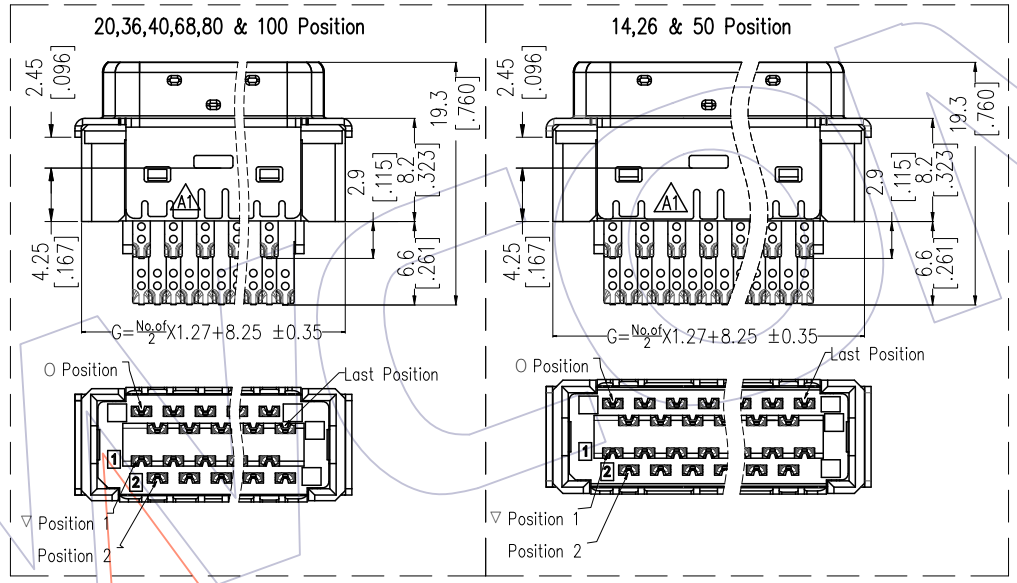

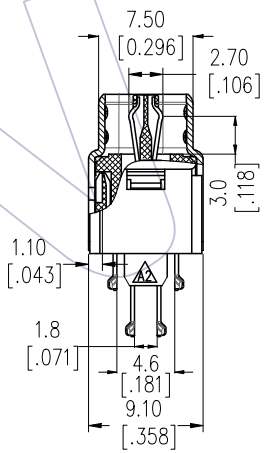

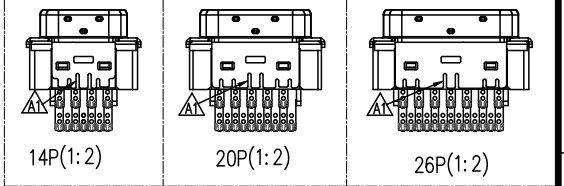

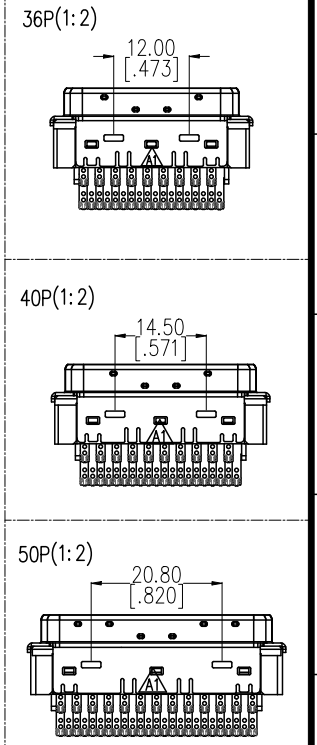

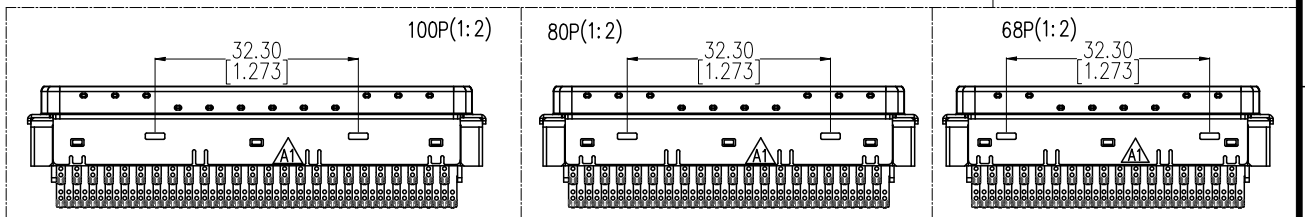

Ordering Information

6320M- XXX S S XX M N A 01

No. of Pins:
014=14P
020=20P
026=26P
036=36P
040=40P
050=50P
068=68P
080=80P
100=100P

Contact Plated:
S1=Sel. 3u"Gold /Tin
S2=Sel. 5u"Gold /Tin
S3=Sel. 10u"Gold /Tin
S4=Sel. 15u"Gold /Tin
S5=Sel. 30u"Gold /Tin

REV	DATE	MODIFICATION DESCRIPTION	CHANGE
A2	2020/08/25	CHAMFER	XSR
A1	2019/09/20	MODIFY	XSR
A0	2019/06/06	NEW	——

OPERATION	
X.X	±0.40
X.XX	±0.25
X.XXX	±0.15
Angle	± 3°
DIM	TOL

DRAW XSR	DATE 2020/08/25	SCALE	FIT
CHECK	DATE	UNIT	mm / inch
APPROVE	DATE	SIZE	A4
		SHEET	1/1
		PROJ.	

PART NO. 6320M-XXXSSXXMNA01

TITLE: 1.27mm MDR SCSI Male (Soldering Type)

Customer NO.

WCON
Http: www.wcon.com
WCON-Dongguan
Tel: +86 769 85358920
Fax: +86 769 85358915
E-mail: sales@wcon.com
WCON-Kunshan
Tel: +86 512 57468408
Fax: +86 512 57468468
E-mail: salesks@wcon.com