HSF

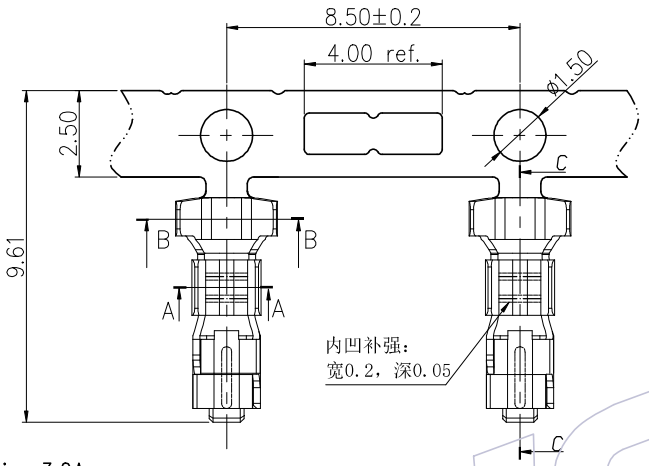

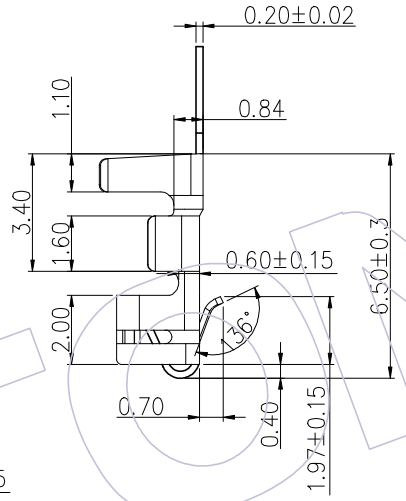

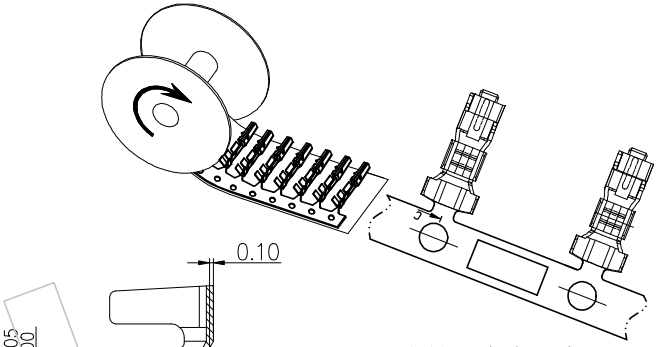

电镀后卷盘示意图

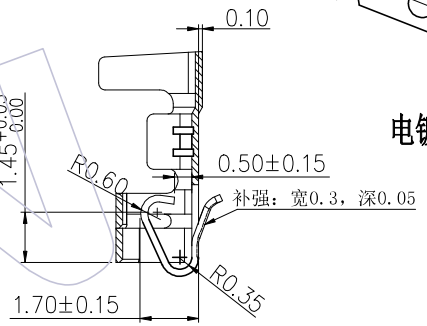

SECTION: C-C

NOTES:
Current Rating: 3.0A
Voltage Rating: 250V AC
Contact Resistance: 20mΩ max
Withstand Voltage: 1000V AC/minute
Insulation Resistance: 1000MΩ min
Operation Temperature: -40℃ to +105℃

Material: Brass or Phosphor Bronze
Plating: Au or Sn Over Ni

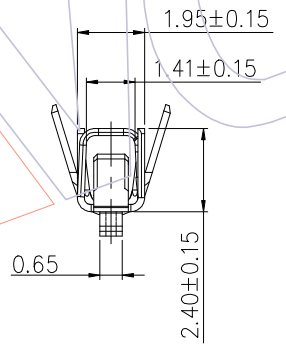

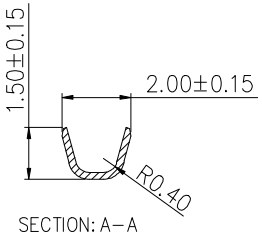

SECTION: A-A

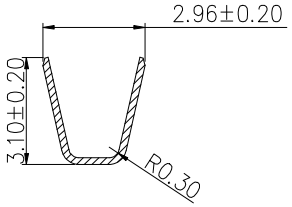

SECTION: B-B

Ordering Information

WF2501 - T X XX 0 3*

Materlal
B=Brass
P=Phosphor bronze

Contact Plating:
G0=Gold Flash
S0=Gold Flash/Tin
SN=Tin

Dimensional & Ordering Information

Part No.	Thickness	Thickness	Finish	Wire Range	Insulation O.D	Q'ty/Reel
WF2501-TPXX03	0.20	Phosphor bronze	Tin-Plated	AWG#22~#24	1.90mm(Max.)	7,000PCS
WF2501-TBXX03	0.20	Brass	Tin-Plated	AWG#22~#24	1.90mm(Max.)	7,000PCS

REV	DATE	MODIFICATION DESCRIPTION	CHANGE
A0	2021/08/12	NEW	——

OPERATION	
X.X	±0.40
X.XX	±0.25
X.XXX	±0.15
Angle	± 3°
DIM	TOL

DRAW Tang	DATE 2021/08/12	SCALE	FIT
CHECK	DATE	UNIT	mm
		SIZE	A4
APPROVE	DATE	SHEET	1/1
		PROJ.	

PART NO. WF2501-TXXX03*

TITLE: J-XH 2.50 TERMINAL

Customer NO.

WCON
Http: www.wcon.com

WCON-Dongguan
Tel: +86 769 85358920
Fax: +86 769 85358915
E-mail: sales@wcon.com

WCON-Kunshan
Tel: +86 512 57468408
Fax: +86 512 57468468
E-mail: salesks@wcon.com