HSF

NOTES:
Rated Current: 0.5~1.0 AMP. A1
Contact Resistance: 25mΩ Max.
Withstand Voltage: 500V
Insulation Resistance: 10000MΩ Min.
Operation Temperature: −55℃ to +125℃

Contact Material: Copper Alloy
Contact Plating: Sn and Au over Ni
Tail Material: Copper Alloy
Tail Plating: Sn over Ni
Main Body Material: High Temperature Thermoplastic(UL94V−0)

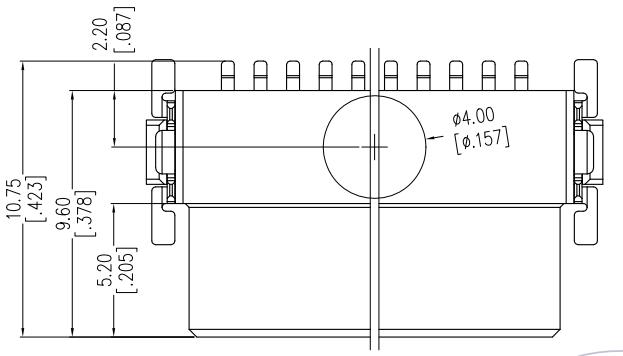

Recommended P.C.B Layout(Top Side)
(PCB BOARD TOLERANCE±0.05)

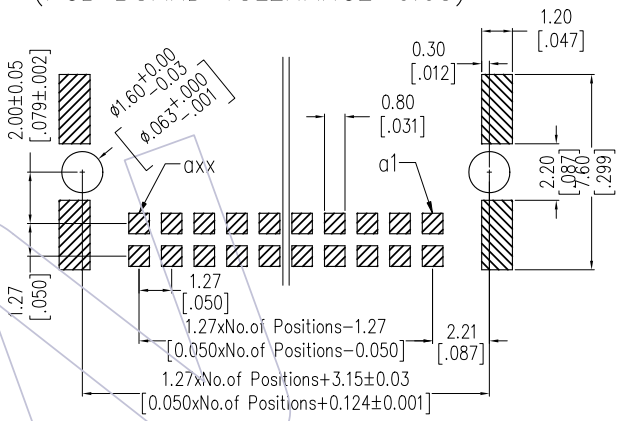

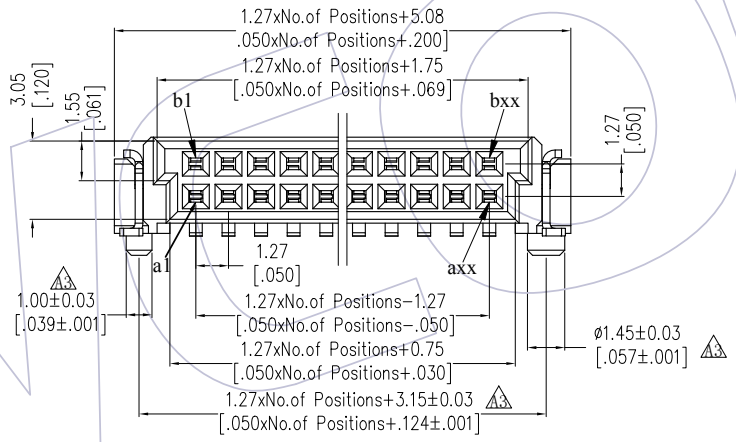

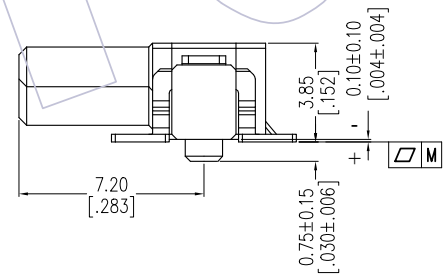

Ordering Information

3910- S XXX - 096 Z XX W R 1 W A5

- No.of Pins: 010: 10 Pin; 020: 20 Pin; ~ 100: 100 Pin
- Plating A4: S3=Sel.10U" Gold/Tin; S4=Sel.15U" Gold/Tin; S5=Sel.30U" Gold/Tin
- Package: R: Tape & Reel
- Blank=W/O WCON; W=W/T WCON

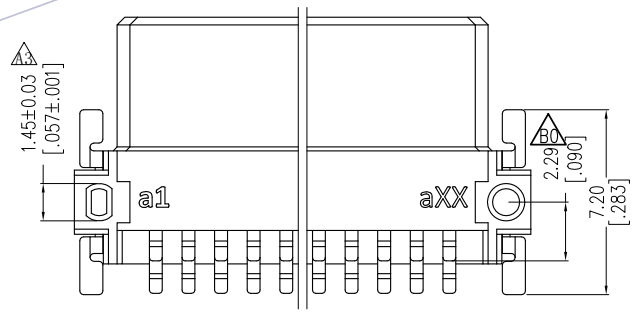

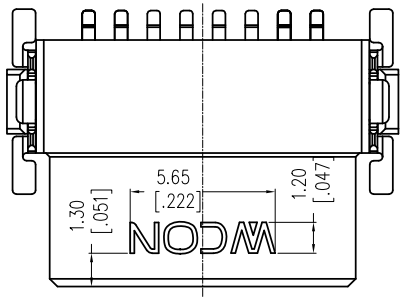

LOGO左右居中 A5

PIN	M
10~40PIN	0.12
42~100PIN	0.15

REV	DATE	MODIFICATION DESCRIPTION	CHANGE
B0	2021/03/02	Add DIM.	XSR
A5	2020/11/12	Add W/T WCON LOGO SPEC&P/N	XSR
A4	2019/12/12	Modify	XSR
A0	2017/05/17	NEW	——

OPERATION	
X.X	±0.40
X.XX	±0.25
X.XXX	±0.15
Angle	± 3°
DIM	TOL

DRAW	XSR	DATE	2021/03/02
CHECK		DATE	
APPROVE		DATE	
SCALE	1:1	UNIT	mm
SIZE	A4	SHEET	1/1
PROJ.			

PART NO. 3910−SXXX−096ZXXWR1(W) A5

TITLE: A2 1.27mm Pitch SDC CONNECTORS FEMALE "E"TYPE(TYPE Q)

Customer NO.

WCON
Http: www.wcon.com
WCON−Dongguan
Tel: +86 769 85358920
Fax: +86 769 85358915
E-mail: sales@wcon.com
WCON−Kunshan
Tel: +86 512 57468408
Fax: +86 512 57468468
E-mail: salesks@wcon.com